YASKAWA

YASKAWA AC Drive 1000-Series Option

Modbus TCP/IP

Technical Manual

Type: SI-EM3

To properly use the product, read this manual thoroughly and retain for easy reference, inspection, and maintenance. Ensure the end user receives this manual.

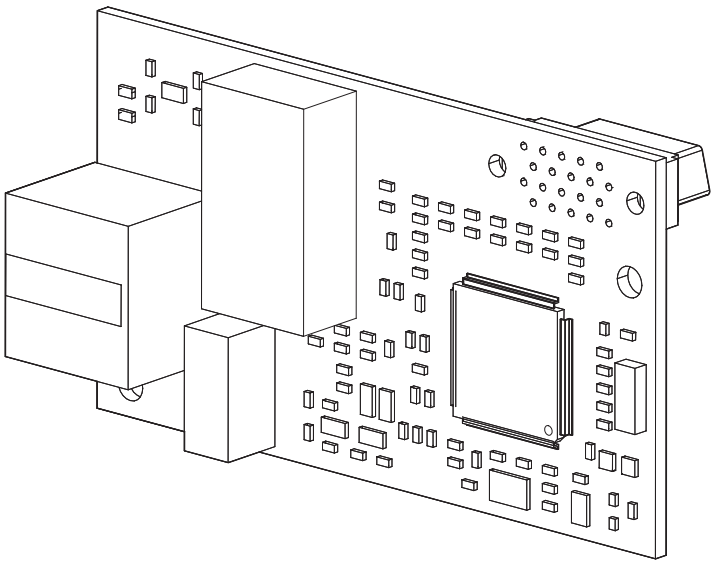

MANUAL NO. SIEP C730600 57A

Copyright © 2012 YASKAWA ELECTRIC CORPORATION

All rights reserved. No part of this publication may be reproduced, stored in a retrieval system, or transmitted, in any form or by any means, mechanical, electronic, photocopying, recording, or otherwise, without the prior written permission of Yaskawa. No patent liability is assumed with respect to the use of the information contained herein. Moreover, because Yaskawa is constantly striving to improve its high-quality products, the information contained in this manual is subject to change without notice. Every precaution has been taken in the preparation of this manual. Yaskawa assumes no responsibility for errors or omissions. Neither is any liability assumed for damages resulting from the use of the information contained in this publication.

Table of Contents

1 PREFACE AND SAFETY 4
2 PRODUCT OVERVIEW. 6
3 RECEIVING 7
4 OPTION COMPONENTS 8
5 INSTALLATION PROCEDURE 10
6 RELATED DRIVE PARAMETERS 16
7 MODBUS TCP/IP MESSAGING 19
8 WEB INTERFACE. 28
9 TROUBLESHOOTING 31
10 SPECIFICATIONS. 34

1 Preface and Safety

Yaskawa manufactures products used as components in a wide variety of industrial systems and equipment. The selection and application of Yaskawa products remain the responsibility of the equipment manufacturer or end user. Yaskawa accepts no responsibility for the way its products are incorporated into the final system design. Under no circumstances should any Yaskawa product be incorporated into any product or design as the exclusive or sole safety control. Without exception, all controls should be designed to detect faults dynamically and fail safely under all circumstances. All systems or equipment designed to incorporate a product manufactured by Yaskawa must be supplied to the end user with appropriate warnings and instructions as to the safe use and operation of that part. Any warnings provided by Yaskawa must be promptly provided to the end user. Yaskawa offers an express warranty only as to the quality of its products in conforming to standards and specifications published in the Yaskawa manual. NO OTHER WARRANTY, EXPRESS OR IMPLIED, IS OFFERED. Yaskawa assumes no liability for any personal injury, property damage, losses, or claims arising from misapplication of its products.

◆ Applicable Documentation

The following manuals are available for the option:

Option

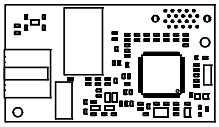	**Yaskawa AC Drive 1000-Series Option SI-EM3 Modbus TCP/IP Installation Manual Manual No: TOBP C730600 57**	Read this manual first. The installation manual is packaged with the option and contains information required to install the option and set up related drive parameters.
	Yaskawa AC Drive 1000-Series Option SI-EM3 Modbus TCP/IP Technical Manual Manual No: SIEP C730600 57 (This book)	The technical manual contains detailed information about the option. Access the following sites to obtain the technical manual: U.S.: http://www.yaskawa.com Europe: http://www.yaskawa.eu.com Japan: http://www.e-mechatronics.com For questions, contact your local Yaskawa sales office or the nearest Yaskawa representative.

Yaskawa Drive

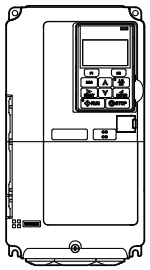	**Yaskawa AC Drive 1000-Series Quick Start Guide**	The drive manuals cover basic installation, wiring, operation procedures, functions, troubleshooting, and maintenance information. The manuals also include important information about parameter settings and drive tuning. Access these sites to obtain Yaskawa instruction manuals: U.S.: http://www.yaskawa.com Europe: http://www.yaskawa.eu.com Japan: http://www.e-mechatronics.com Other areas: contact a Yaskawa representative.
	Yaskawa AC Drive 1000-Series Technical Manual	

◆ Terms

Note: Indicates supplemental information that is not related to safety messages.
Drive: Yaskawa AC Drive 1000-Series
Option: Yaskawa AC Drive 1000-Series Option SI-EM3 Modbus TCP/IP

◆ Registered Trademarks

- Modbus TCP/IP is a trademark of Modbus-IDA.
- All trademarks are the property of their respective owners.

◆ Supplemental Safety Information

Read and understand this manual before installing, operating, or servicing this option. The option must be installed according to this manual and local codes.

The following conventions are used to indicate safety messages in this manual. Failure to heed these messages could result in serious or possibly even fatal injury or damage to the products or to related equipment and systems.

⚠ DANGER
Indicates a hazardous situation, which, if not avoided, will result in death or serious injury.

⚠ WARNING
Indicates a hazardous situation, which, if not avoided, could result in death or serious injury.

⚠ CAUTION
Indicates a hazardous situation, which, if not avoided, could result in minor or moderate injury.

NOTICE
Indicates an equipment damage message.

■ General Safety

General Precautions
• The diagrams in this section may include options and drives without covers or safety shields to illustrate details. Reinstall covers or shields before operating any devices. The option should be used according to the instructions described in this manual. • Any illustrations, photographs, or examples used in this manual are provided as examples only and may not apply to all products to which this manual is applicable. • The products and specifications described in this manual or the content and presentation of the manual may be changed without notice to improve the product and/or the manual. • When ordering new copies of the manual, contact a Yaskawa representative or the nearest Yaskawa sales office and provide the manual number shown on the front cover.

⚠ DANGER
Heed the safety messages in this manual. Failure to comply will result in death or serious injury. The operator is responsible for injuries or equipment damage caused from failure to heed the warnings in the manual.

NOTICE
Do not modify the drive or option circuitry. Failure to comply could result in damage to the drive or option and will void warranty. Yaskawa is not responsible for any modification of the product made by the user. This product must not be modified. **Do not expose the drive or option to halogen group disinfectants.** Failure to comply may cause damage to the electrical components in the option. Do not pack the drive in wooden materials that have been fumigated or sterilized. Do not sterilize the entire package after the product is packed.

2 Product Overview

◆ About This Product

This option provides a communications connection between the drive and a Modbus TCP/IP network. The option connects the drive to a Modbus TCP/IP network and facilitates the exchange of data.

This manual explains the handling, installation and specifications of this product.

The option is a communications link to connect industrial devices (such as smart motor controllers, operator interfaces, and variable frequency drives) as well as control devices (such as programmable controllers and computers) to a network. The option is a simple, networking solution that reduces the cost and time to wire and install factory automation devices, while providing interchangeability of like components from multiple vendors.

By installing the option to a drive, it is possible to do the following from a Modbus TCP/IP master device:

- operate the drive
- monitor the operation status of the drive
- change parameter settings.

◆ Applicable Models

The option can be used with the drive models in ***Table 1***.

Table 1 Applicable Models

Drive Series	Drive Model Number	Software Version <1>
A1000	CIMR-A□2A□□□□	≥ 1010
	CIMR-A□4A0002 to 4A0675	≥ 1010
	CIMR-A□4A0930 and 4A1200	301□
	CIMR-A□5A□□□□	504□

<1> See “PRG” on the drive nameplate for the software version number.

3 Receiving

Please perform the following tasks upon receipt of the option:

- Inspect the option for damage. Contact the shipper immediately if the option appears damaged upon receipt.
- Verify receipt of the correct model by checking the model number printed on the name plate of the option package.
- Contact your supplier if you have received the wrong model or the option does not function properly.

◆ Option Package Contents

Table 2 Option Package Contents

Description:	Option	Ground Wire	Screws (M3)	LED Label	Installation Manual
–	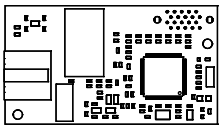			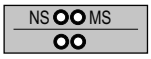	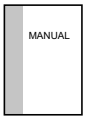
Quantity:	1	1	3	1	1

◆ Tools Required for Installation

- A Phillips screwdriver (M3 metric/#1, #2 U.S. standard size <1>) is required to install the option and remove drive front covers.
- Diagonal cutting pliers. (required for some drive models)
- A small file or medium grit sandpaper. (required for some drive models)

<1> Screw sizes vary by drive capacity. Select a screwdriver appropriate for the drive capacity.

Note: Tools required to prepare option networking cables for wiring are not listed in this manual.

4 Option Components

◆ SI-EM3 Option

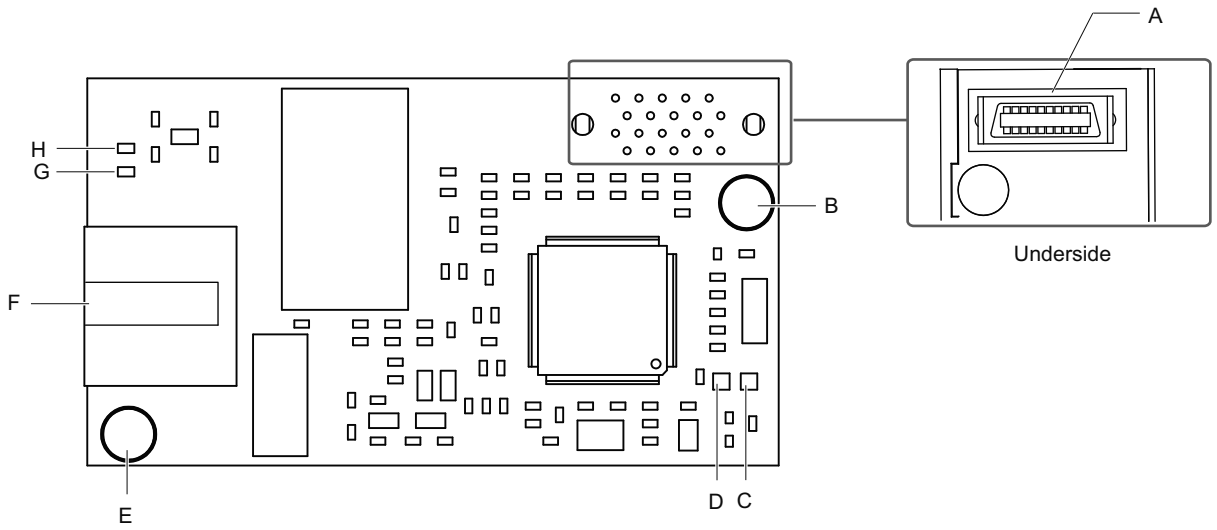

A – Connector (CN5)
B – Installation hole
C – LED (MS) *<1>*
D – LED (NS) *<1>*
E – Ground terminal and installation hole *<2>*
F – Communication connector CN1 (RJ45)
G – LED (LINK/ACT) *<1>*
H – LED (10/100) *<1>*

<1> ***Refer to Option LED Display on page 9*** for details on the LEDs
<2> The ground wire provided in the option shipping package must be connected during installation

Figure 1 SI-EM3 Option Components

◆ Communication Connector CN1

The communication connector on the option is a modular RJ45 female connector designated CN1.
CN1 is the connection point for a customer supplied male Modbus network communication cable.

Table 3 Male, 8-way Ethernet Modular Connector (Customer Supplied)

Male Ethernet 8-Way Modular Connector	Pin	Description
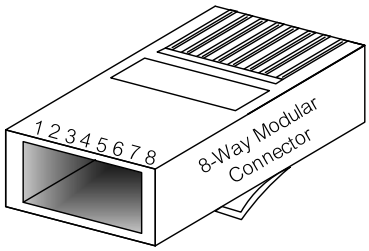	1 (Pair 2)	Transmit data (TXD) +
	2 (Pair 2)	Transmit data (TXD) -
	3 (Pair 3)	Receive data (RXD) +
	4 (Pair 1)	Not used *<1>*
	5 (Pair 1)	Not used *<1>*
	6 (Pair 3)	Receive data (RXD) -
	7 (Pair 4)	Not used *<1>*
	8 (Pair 4)	Not used *<1>*

<1> Not used for 10 Mbps and 100 Mbps networks.

◆ Option LED Display

The option has four LEDs:

Bi-color Status LEDs:

- Module status (MS) red/green
- Network status (NS) red/green

Green Ethernet LEDs:

- Network speed-10/100 (MS) green
- Link status and network activity-Link/Act (NS) red/green

The operational states of the option LEDs after the power-up diagnostic LED sequence is completed are described in ***Table 4***. Wait at least 2 seconds for the power-up diagnostic process to complete before verifying the states of the LEDs.

Table 4 Option LED States

Name	Indication		Operating Status	Remarks
	Color	Status		
MS	–	OFF	Power supply OFF	Power is not being supplied to the drive
	Green	ON	Option operating	The option is operating normally
	Green	Flashing	Option initializing	The option is configuring an IP address
	Red	ON	Fatal error occurred	The option has detected a fatal (unrecoverable) error
	Red	Flashing	Non-fatal error occurred	The option has detected a non-fatal (recoverable) error
NS	–	OFF	Offline or power supply OFF	–
	Green	ON	Online communications established	The option is online and has established connections
	Green	Flashing	Control connection active	The option is online and has an established and active control connection.
	Red	ON	Communications error (fatal)	The option detected a duplicate IP address
10/100 <1>	Green	OFF	10 Mbps is established	–
	Green	ON	100 Mbps is established	
LINK/ACT <1>	Green	OFF	Link is not established	
	Green	ON	Link is established	
	Green	Flashing	Link is established and there is network activity	

<1> Remove the drive front cover to check the status of the LED. Be careful not to touch the main circuit terminals or the control board in the drive.

5 Installation Procedure

◆ Section Safety

⚠ DANGER

Electrical Shock Hazard

Do not connect or disconnect wiring while the power is on.

Failure to comply will result in death or serious injury.

Disconnect all power to the drive and wait at least the amount of time specified on the drive front cover safety label. After all indicators are off, measure the DC bus voltage to confirm safe level, and check for unsafe voltages before servicing. The internal capacitor remains charged after the power supply is turned off.

⚠ WARNING

Electrical Shock Hazard

Do not remove the front covers of the drive while the power is on.

Failure to comply could result in death or serious injury.

The diagrams in this section may include options and drives without covers or safety shields to show details. Be sure to reinstall covers or shields before operating any devices. The option should be used according to the instructions described in this manual.

Do not allow unqualified personnel to use equipment.

Failure to comply could result in death or serious injury.

Maintenance, inspection, and replacement of parts must be performed only by authorized personnel familiar with installation, adjustment, and maintenance of this product.

Do not touch circuit boards while the power to the drive is on.

Failure to comply could result in death or serious injury.

Do not use damaged wires, place excessive stress on wiring, or damage the wire insulation.

Failure to comply could result in death or serious injury.

Fire Hazard

Tighten all terminal screws to the specified tightening torque.

Loose electrical connections could result in death or serious injury by fire due to overheating of electrical connections.

NOTICE

Damage to Equipment

Observe proper electrostatic discharge (ESD) procedures when handling the option, drive, and circuit boards.

Failure to comply may result in ESD damage to circuitry.

Never shut the power off while the drive is outputting voltage.

Failure to comply may cause the application to operate incorrectly or damage the drive.

Do not operate damaged equipment.

Failure to comply may cause further damage to the equipment.

Do not connect or operate any equipment with visible damage or missing parts.

Do not use unshielded cable for control wiring.

Failure to comply may cause electrical interference resulting in poor system performance.

Use shielded twisted-pair wires and ground the shield to the ground terminal of the drive.

NOTICE

Properly connect all pins and connectors.

Failure to comply may prevent proper operation and possibly damage equipment.

Check wiring to ensure that all connections are correct after installing the option and connecting any other devices.

Failure to comply may result in damage to the option.

◆ Prior to Installing the Option

Prior to installing the option, wire the drive, make necessary connections to the drive terminals, and verify that the drive functions normally without the option installed. Refer to the Quick Start Guide packaged with the drive for information on wiring and connecting the drive.

Figure 2 shows an exploded view of the drive with the option and related components for reference.

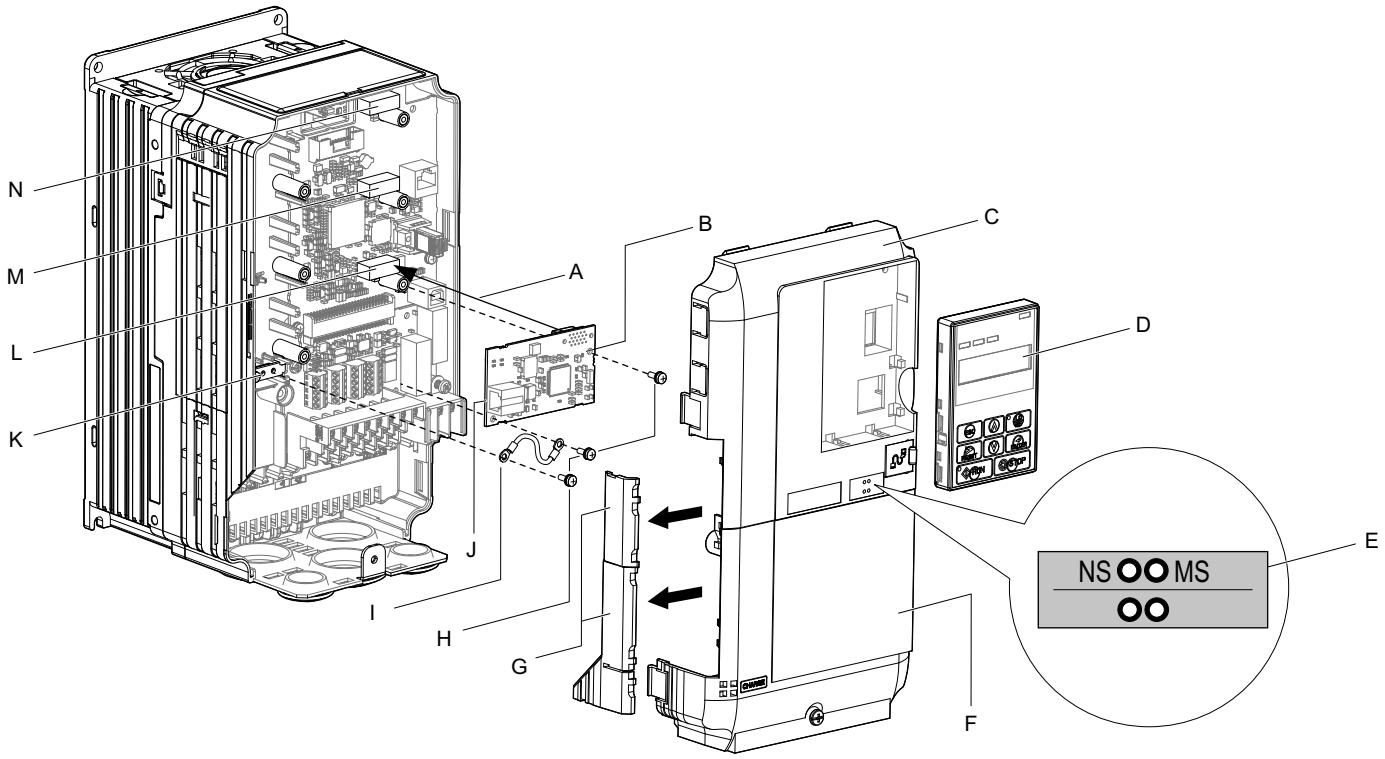

A – Insertion point for CN5 connector
B – SI-EM3 option
C – Drive front cover
D – Digital operator
E – LED label
F – Drive terminal cover
G – Removable tabs for wire routing
H – Included screws
I – Ground wire
J – Option modular connector CN1
K – Drive grounding terminal (FE)
L – Connector CN5-A
M – Connector CN5-B
N – Connector CN5-C

Figure 2 Drive Components with Option

◆ Installing the Option

Remove the front covers of the drive before installing the option. Refer to the drive Quick Start Guide for directions on removing the front covers. Cover removal varies depending on drive size. This option can be inserted only into the **CN5-A** connector located on the drive control board.

DANGER! *Electrical Shock Hazard. Disconnect all power to the drive and wait at least the amount of time specified on the drive front cover safety label. After all indicators are off, measure the DC bus voltage to confirm safe level, and check for unsafe voltages before servicing to prevent electric shock. The internal capacitor remains charged even after the power supply is turned off.*

1. Shut off power to the drive, wait the appropriate amount of time for voltage to dissipate, then remove the digital operator (D) and front covers (C, F). Front cover removal varies by model.

NOTICE: *Damage to Equipment. Observe proper electrostatic discharge procedures (ESD) when handling the option, drive, and circuit boards. Failure to comply may result in ESD damage to circuitry.*

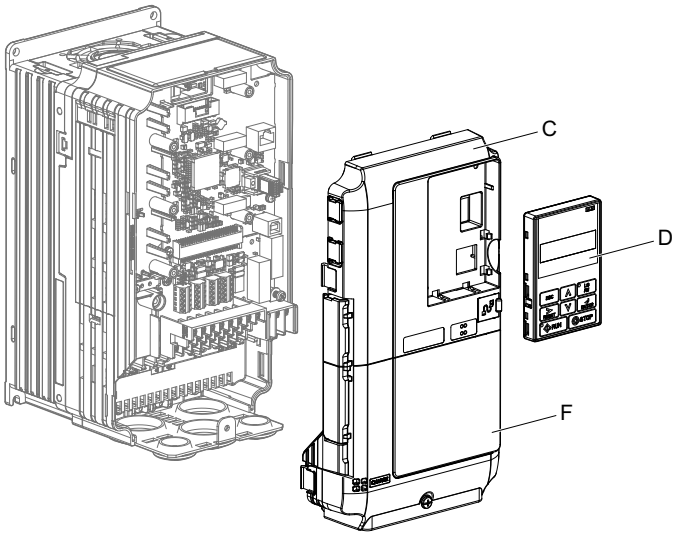

Figure 3 Remove the Front Covers and Digital Operator

2. With the front covers and digital operator removed, apply the LED label (E) in the appropriate position on the drive top front cover (C).

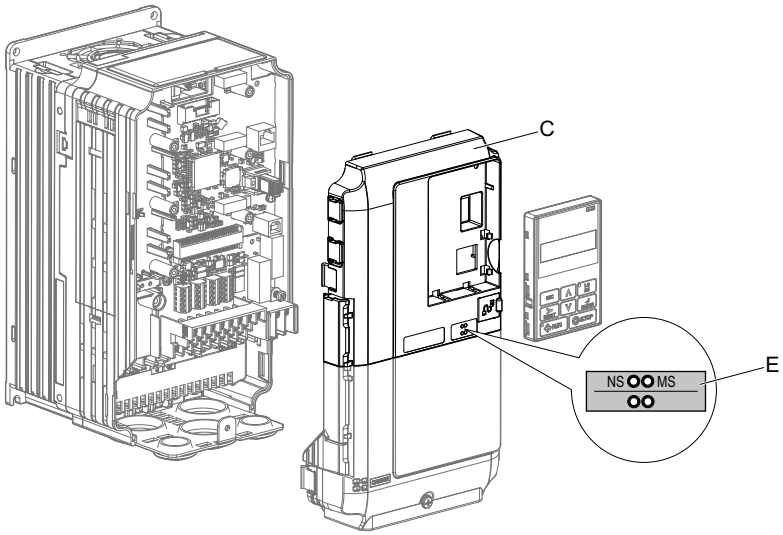

Figure 4 Apply the LED Label

3. Insert the option (B) into the **CN5-A** connector (L) located on the drive and fasten it using one of the included screws (H).

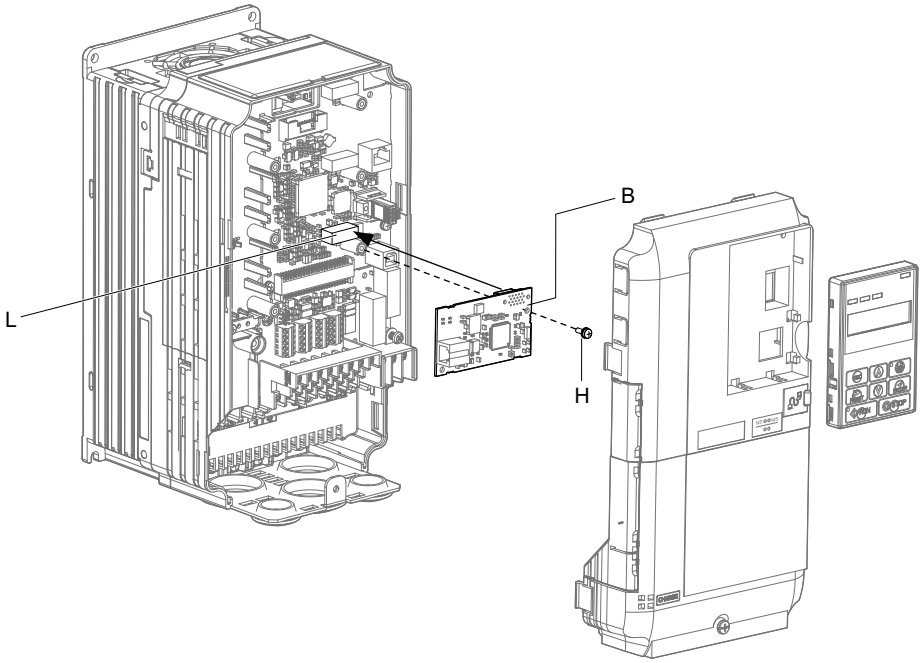

Figure 5 Insert the Option

4. Connect the ground wire (I) to the ground terminal (K) using one of the remaining provided screws (H). Connect the other end of the ground wire (I) to the remaining ground terminal and installation hole on the option (B) using the last remaining provided screw (H) and tighten both screws to 0.5 to 0.6 N·m (4.4 to 5.3 in lbs).

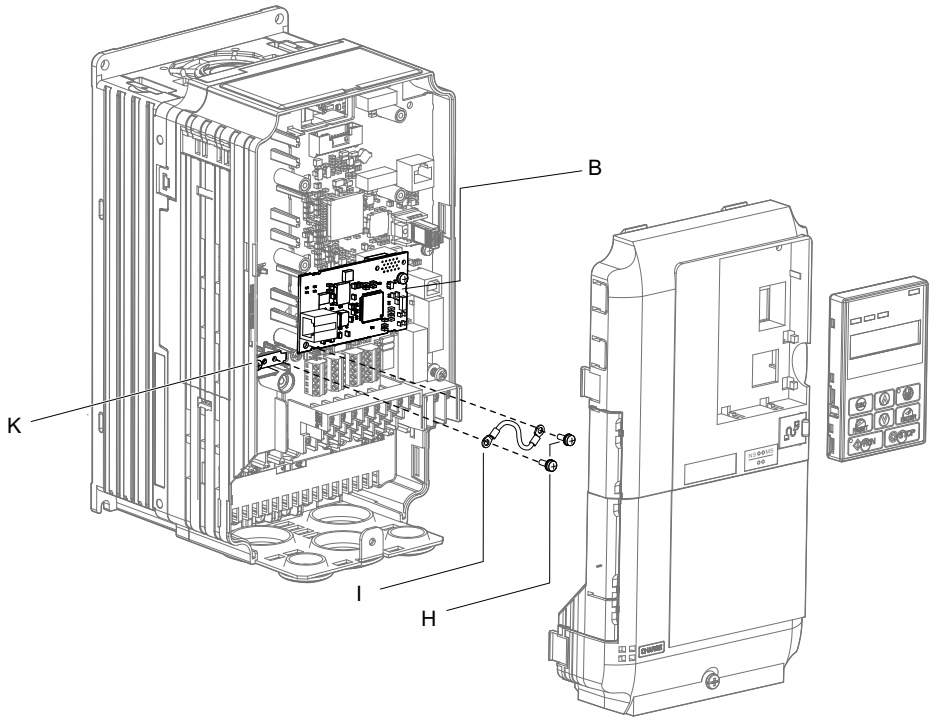

Figure 6 Connect the Ground Wire

Note: There are two screw holes on the drive for use as ground terminals (K). When connecting three options, two ground wires will need to share the same drive ground terminal.

5. Route the option wiring.
Depending on the drive model, some drives may require routing the wiring through the side of the front cover to the outside to provide adequate space for the wiring. Refer to the Peripheral Devices & Options section of the drive Quick Start Guide or Technical Manual for more information on wire routing of specific models.
Route the wiring through the side of the front cover to the outside. In these cases, using diagonal cutting pliers, cut out the perforated openings on the left side of the drive front cover as shown in ***Figure 7***-A. Sharp edges along the cut out should be smoothed down with a file or sand paper to prevent any damage to the wires.
Route the wiring inside the enclosure as shown in ***Figure 7***-B for drives that do not require routing through the front cover.

Note: Separate communication cables from main circuit wiring and other electrical lines.

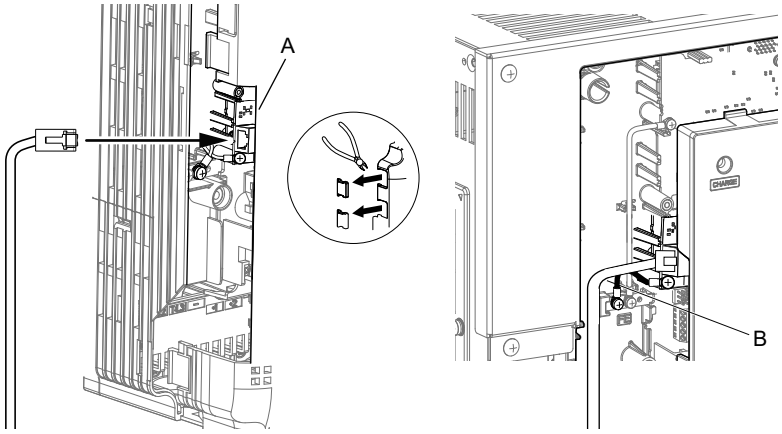

A – Route wires through the openings provided on the left side of the front cover. *<1>*

B – Use the open space provided inside the drive to route option wiring.

<1> The drive will not meet NEMA Type 1 requirements if wiring is exposed outside the enclosure.

Figure 7 Wire Routing Examples

6. Connect the Ethernet communication cable to the option modular connector (CN1).
To connect the option to a network, insert the RJ45 communication connector of the Cat 5e patch cable into the option modular female connector (CN1). Ensure the cable end is firmly connected (see ***Figure 7***).

Communication Cable Specifications
Only use cable recommended for Modbus TCP/IP™. Using a cable not specifically recommended may cause the option or drive to malfunction.

Connection Diagram

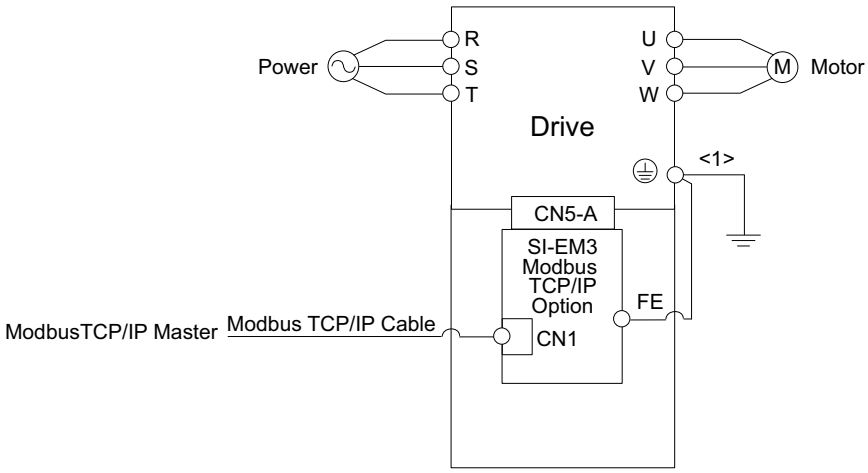

<1> The ground wire provided in the option shipping package must be connected during installation.

Figure 8 Wiring Diagram

7. Replace and secure the front covers of the drive (C, F) and replace the digital operator (D).

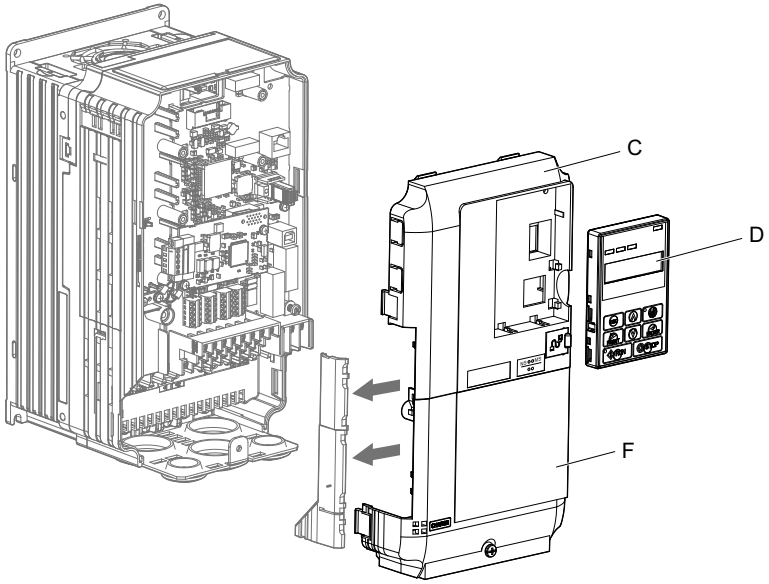

Figure 9 Replace the Front Covers and Digital Operator

Note: Take proper precautions when wiring the option so that the front covers will easily fit back onto the drive. Make sure no cables are pinched between the front covers and the drive when replacing the covers.

8. Set drive parameters in ***Table 5*** for proper option performance.

6 Related Drive Parameters

The following parameters are used to set up the drive for operation with the option. Parameter setting instructions can be found in the drive Quick Start Guide or Technical Manual.

Confirm proper setting of all the parameters in ***Table 5*** using the digital operator, before starting network communications.

Table 5 Related Parameter Settings

No. (Addr. H)	Name	Description	Values
b1-01 (180) <1>	Frequency Reference Selection	Selects the frequency reference input source. 0: Operator - Digital preset speed d1-01 to d1-17 1: Terminals - Analog input terminal A1 or A2 2: MEMOBUS/Modbus communications 3: Option 4: Pulse Input (Terminal RP)	Default: 1 Range: 0 to 4 (Set to 3)
b1-02 (181) <1>	Run Command Selection	Selects the run command input source. 0: Digital Operator - RUN and STOP keys 1: Digital input terminals S1 to S8 2: MEMOBUS/Modbus communications 3: Option	Default: 1 Range: 0 to 3 (Set to 3)
F6-01 (3A2)	Operation Selection after Communications Error	Determines drive response when a bUS error is detected during communications with the option. 0: Ramp to Stop 1: Coast to Stop 2: Fast-Stop 3: Alarm Only <2>	Default: 1 Range: 0 to 3
F6-02 (3A3)	External Fault Detection Conditions (EF0)	Sets the condition for external fault detection (EF0). 0: Always detected 1: Detected only during operation	Default: 0 Range: 0, 1
F6-03 (3A4)	Stopping Method for External Fault from the Communication Option	Determines drive response for external fault input (EF0) detection during option communications. 0: Ramp to Stop 1: Coast to Stop 2: Fast-Stop 3: Alarm Only <2>	Default: 1 Range: 0 to 3
F6-06 (3A7) <3>	Torque Reference/Torque Limit Selection from the Communication Option	0: Torque Reference/Torque Limit via network communications are disabled 1: Torque Reference/Torque Limit via network communications are enabled <4>	Default: 0 Range: 0, 1
F6-07 (3A8) <3>	NetRef/ComRef Selection Function	0: Multi-step speed reference disabled, (F7 functionality) 1: Multi-step speed reference allowed, (V7 functionality)	Default: 0 Range: 0, 1
F6-08 (36A) <3>	Reset Communication Related Parameters	Determines if communication-related parameters F6-□□ and F7-□□ are set back to original default values when the drive is initialized using parameter A1-03. 0: Do not reset parameters 1: Reset parameters	Default: 0 <7> Range: 0, 1
F7-01 (3E5) <5> <6> <7>	IP Address 1	Sets the static/fixed IP address. Parameter F7-01 sets the most significant octet.	Default: 192 Range: 0 to 255
F7-02 (3E6) <5> <6> <7>	IP Address 2	Sets the static/fixed IP address. Parameter F7-02 sets the second most significant octet.	Default: 168 Range: 0 to 255
F7-03 (3E7) <5> <6> <7>	IP Address 3	Sets the static/fixed IP address. Parameter F7-03 sets the third most significant octet.	Default: 1 Range: 0 to 255

No. (Addr. H)	Name	Description	Values
F7-04 (3E8) <5> <6> <7>	IP Address 4	Sets the static/fixed IP address. Parameter F7-04 sets the fourth most significant octet.	Default: 20 Range: 0 to 255
F7-05 (3E9) <7>	Subnet Mask 1	Sets the static/fixed Subnet Mask. Parameter F7-05 sets the most significant octet.	Default: 255 Range: 0 to 255
F7-06 (3EA) <7>	Subnet Mask 2	Sets the static/fixed Subnet Mask. Parameter F7-06 sets the second most significant octet.	Default: 255 Range: 0 to 255
F7-07 (3EB) <7>	Subnet Mask 3	Sets the static/fixed Subnet Mask. Parameter F7-07 sets the third most significant octet.	Default: 255 Range: 0 to 255
F7-08 (3EC) <7>	Subnet Mask 4	Sets the static/fixed Subnet Mask. Parameter F7-08 sets the fourth most significant octet.	Default: 0 Range: 0 to 255
F7-09 (3ED) <7>	Gateway Address 1	Sets the static/fixed Gateway address. Parameter F7-09 sets the most significant octet.	Default: 192 Range: 0 to 255
F7-10 (3EE) <7>	Gateway Address 2	Sets the static/fixed Gateway address. Parameter F7-10 sets the second most significant octet.	Default: 168 Range: 0 to 255
F7-11 (3EF) <7>	Gateway Address 3	Sets the static/fixed Gateway address. Parameter F7-11 sets the third most significant octet.	Default: 1 Range: 0 to 255
F7-12 (3E0) <7>	Gateway Address 4	Sets the static/fixed Gateway address. Parameter F7-12 sets the fourth most significant octet.	Default: 1 Range: 0 to 255
F7-13 (3F1)	Address Mode at Startup	Selects how the option address is set. 0: Static <6> 1: BOOTP 2: DHCP	Default: 2 Range: 0 to 2
F7-14 (3F2)	Duplex Mode Selection	Selects duplex mode setting. 0: Half duplex forced 1: Auto-negotiate duplex mode and communication speed 2: Full duplex forced	Default: 1 Range: 0 to 2
F7-15 (3F3) <8>	Communication Speed Selection	Sets the communication speed. 10: 10 Mbps 100: 100 Mbps	Default: 10 Range: 10, 100
F7-16 (3F4)	Communication Loss Time-out	Sets the time-out value for communication loss detection in tenths of a second. A value of 0 disables the connection time-out. Example: An entered value of 100 represents 10.0 seconds.	Default: 0 Min.: 0 Max.: 300
H5-11 (43C)	Communications ENTER Function Selection	Select the function for the ENTER command that saves parameter data to the drive. 0: Parameter changes are activated when ENTER command is written 1: Parameter changes are activated immediately without use of ENTER command	Default: 1 Range: 0, 1

<1> To start and stop the drive with the option master device using serial communications, set b1-02 to 3. To control the drive frequency reference via the master device, set b1-01 to 3.
<2> If F6-01 is set to 3, the drive will continue to operate when a fault is detected. Take safety measures, such as installing an emergency stop switch.
<3> Enabled in CLV, AOLV/PM, and CLV/PM control modes (A1-02 = 3, 6, or 7). When enabled, d5-01 determines whether the value is read as the Torque Limit value (d5-01 = 0) or read as the Torque Reference value (d5-01 = 1). In CLV/PM, this value is read as the Torque Limit.
<4> The setting specifies that the Torque Reference or Torque Limit is to be provided via network communications (F6-06 = 1). The motor may rotate if no torque reference or Torque Limit is supplied from the PLC.
<5> Cycle power for setting changes to take effect.
<6> If F7-13 is set to 0, then all IP Addresses (F7-01 to F7-04) must be unique.
<7> Set F7-01 to F7-12 when F7-13 is set to 0.
<8> Set F7-15 when F7-14 is set to 0 or 2.

Table 6 Option Monitors

No.	Name	Description	Value Range
U6-80 to U6-83	Online IP Address	IP Address currently available; U6-80 is the most significant octet	0 to 255
U6-84 to U6-87	Online Subnet	Subnet currently available; U6-84 is the most significant octet	0 to 255
U6-88 to U6-91	Online Gateway	Gateway currently available; U6-88 is the most significant octet	0 to 255
U6-92	Online Speed	Link Speed	10: 10 Mbps 100: 100 Mbps
U6-93	Online Duplex	Duplex Setting	0: Half, 1: Full
U6-98	First Fault	First Option Fault	–
U6-99	Current Fault	Current Option Fault	–

7 Modbus TCP/IP Messaging

◆ Modbus TCP/IP Overview

The Modbus TCP/IP protocol is essentially the Modbus protocol over an Modbus TCP/IP network. A master controller (typically a PLC) sends commands to slave devices, which then perform the specified functions and send a response to the master. The drive using the option has slave functionality.

■ Supported Modbus TCP/IP Commands

Table 7 Supported Modbus TCP/IP Commands

Function Code	Function Name
03H	Read Multiple Registers
06H	Write Single Register
10H	Write Multiple Registers
17H	Read/Write Multiple Registers

■ Drive Modbus TCP/IP Option Registers

All of the command registers, monitor registers, and parameters documented in the drive Technical Manual are accessible via the option.

■ High Speed Access Drive Modbus TCP/IP Option Registers

Many of the registers required for control have been specially mapped to provide higher speed access to increase network performance. Use these registers for the best response times.

All of the drive command registers have been mapped to this high speed access area (Modbus TCP/IP registers 01H to 01FH). In addition, the monitors shown in ***Table 8*** are mapped for high speed access.

Table 8 Drive Registers

Address (hex)	Drive Register (hex)	Description	Bit	Description
2000	4B	Status Word (U1-12)	0	During Run
			1	During Zero Speed
			2	During Reverse Direction
			3	During Fault Reset Signal Input
			4	During Speed Agree
			5	Drive Ready
			6	Alarm
			7	Fault
			8	During Operation Error (oPE□□)
			9	During Momentary Power Loss
			A	Motor 2 Selected
			B	Reserved
			C	Reserved
			D	Reserved
			E	ComRef Status, NetRef Status
			F	ComCtrl Status, NetCtrl Status
2001	44	Motor Speed Monitor (U1-05)		
2002	48	Torque Reference Monitor (U1-09)		
2003	F0	PG Count Channel 1		
2004	40	Frequency Reference Monitor (U1-01)		
2005	41	Output Frequency Monitor (U1-02)		
2006	26	Output Current (0.01 A units for drives set to 11 kW in Heavy or Normal Duty and 0.1 A units for drives set to 15 kW and above.)		
2007	4F	Terminal A2 Input Level Monitor (U1-14)		
2008	46	DC Bus Voltage Monitor (U1-07)		

Address (hex)	Drive Register (hex)	Description	Bit	Description
2009	C0	Error Signal 1	0	Reserved
			1	Undervoltage (Uv1)
			2	Control Power Supply Undervoltage (Uv2)
			3	Soft Charge Circuit Fault (Uv3)
			4	Reserved
			5	Ground Fault (GF)
			6	Overcurrent (oC)
			7	Overvoltage (ov)
			8	Heatsink Overheat (oH)
			9	Heatsink Overheat (oH1)
			A	Motor Overload (oL1)
			B	Drive Overload (oL2)
			C	Overtorque Detection 1 (oL3)
			D	Overtorque Detection 2 (oL4)
			E	Dynamic Braking Transistor Fault (rr)
			F	Braking Resister Overheat (rH)
200A	C1	Error Signal 2	0	External Fault at input terminal S3 (EF3)
			1	External Fault at input terminal S4 (EF4)
			2	External Fault at input terminal S5 (EF5)
			3	External Fault at input terminal S6 (EF6)
			4	External Fault at input terminal S7 (EF7)
			5	External Fault at input terminal S8 (EF8)
			6	Cooling fan Error (FAn)
			7	Overspeed (os)
			8	Excessive Speed Deviation (dEv)
			9	PG Disconnected (PGo)
			A	Input Phase Loss (PF)
			B	Output Phase Loss (LF)
			C	Motor Overheat (PTC input) (oH3)
			D	Digital Operator Connection Fault (oPr)
			E	EEPROM Write Error (Err)
			F	Motor Overheat Fault (PTC input) (oH4)
200B	C2	Error Signal 3	0	MEMOBUS/Modbus Communication Error (CE)
			1	Option Communication Error (bUS)
			2	Reserved
			3	Reserved
			4	Control Fault (CF)
			5	Zero Servo Fault (SvE)
			6	Option External Fault (EF0)
			7	PID Feedback Loss (FbL)
			8	Undertorque Detection 1 (UL3)
			9	UL4 Undertorque Detection 2 (UL4)
			A	High Slip Braking Overload (oL7)
			B	Reserved
			C	Reserved
			D	Reserved
			E	Reserved
			F	Hardware Fault (includes oF□)
200C	4E	Terminal A1 Input Level Monitor (U1-13)		
200D	49	Digital Input Terminal Status (U1-10)		
200E	50	Terminal A3 Input Level Monitor (U1-15)		
200F	F1	PG Count Channel 2		
2010	4D	Drive Software Number (Flash) (U1-25)		

◆ Enter Command Types

The drive supports two types of Enter Commands as shown in the table below. An Enter Command is enabled by writing 0 to register number 0900H or 0910H.

■ Enter Commands

Table 9 Enter Command Types

Register Number	Description
0900H	Writes data into the EEPROM (non-volatile memory) of the drive and enables the data to RAM at the same time. Parameter changes remain even if the power supply is cycled.
0910H	Writes data in the RAM only. Parameter changes are lost when the drive is shut off.

Note: Because the EEPROM can be written to a maximum of 100,000 times, refrain from frequently writing to the EEPROM. An Enter Command is not required if reference or broadcast data are sent to the drive.

◆ Enter Command Settings

When replacing earlier Yaskawa drive models with a 1000 Series drive and keeping the MEMOBUS/Modbus communications settings, parameter H5-11 needs to be set in accordance with how the Enter Command functions in the older drive. H5-11 determines if an Enter Command is needed or not in order to activate parameter changes in the drive.

- If upgrading from a G7 or F7 series drive to 1000 Series, set parameter H5-11 to 0.
- If upgrading from a V7 series drive to 1000 Series, set parameter H5-11 to 1.

■ H5-11 and the Enter Commands

Table 10 Enter Command Types

H5-11 Settings	H5-11 = 0	H5-11 = 1
Drive being replaced.	G7, F7	V7
How parameter settings are enabled.	When the Enter Command is received from the master.	As soon as the value is changed.
Upper/lower limit check.	Upper/lower limit check is performed taking the settings of related parameters into account.	The upper/lower limit of the changed parameter is checked only.
Default value of related parameters.	Not affected. The settings of related parameters remain unchanged. Parameters must be changed manually if needed.	The default settings of related parameters are changed automatically.
Error handling when setting multiple parameters.	Data is accepted even if one setting is invalid. The invalid setting will be discarded. No error message occurs.	Error occurs if only one setting is invalid. All data sent is discarded.

◆ Message Format

The data section of the Modbus packet contains the Modbus message. In this data section, the master sends commands to the slave and the slave responds. The message format is configured for both sending and receiving as shown below, and the length of the packets depends on the command function content.

- UNIT IDENTIFIER
- FUNCTION CODE
- DATA

■ Unit Identifier

This field is used for intra-system routing purposes. It is typically used to communicate to a Modbus+ or a Modbus serial line slave through a gateway between an Modbus TCP/IP network and a Modbus serial line. This field is set by the Modbus master in the command and must be returned with the same value in the response by the slave. This is sometimes referred to as the Unit ID. A drive using the option has no gateway functionality.

■ Function Code

When sent by the master, this field identifies the command to be undertaken by the slave. It also identifies the format for the DATA section of the message. The slave normally echoes this command back to the master in its response message. When the most significant bit of this field is set in the response message, it signals an error condition has occurred.

■ Data

This field contains multiple bytes of varying length based upon the Function Code for commands and based upon the results of the command in the response. When sent by the master, this field contains details of the command that the slave will require to carry out the function. When sent by the slave, this field contains details of the response and sometimes error information.

◆ Modbus TCP/IP Option Function Details

■ 03 (03 H) Read Multiple Registers

This function code is used to read the contents of a contiguous block of registers. The command specifies the starting register and the number of registers. The normal response packs two bytes per register. For each register in the response, the first byte contains the most significant bits and the second byte contains the least significant bits.

Table 11 Read Multiple Registers (Command)

Description	Byte(s)	Data (H)
Slave Address	1	00 to FF
Function Code	1	03
Starting Register	2	0000 to FFFF
Quantity of Registers	2	N <*1*>

<1> N = Quantity of Registers (range is 1 - 16)

Table 12 Read Multiple Registers (Response)

Description	Byte(s)	Data (H)
Slave Address	1	00 to FF
Function Code	1	03
Number of Data Bytes	1	2 x N <*1*>
Register Values	N <*1*> x 2	Values contained in slave registers.

<1> N = Quantity of Registers

Table 13 Read Multiple Registers (Error Response)

Description	Byte(s)	Data (H)
Slave Address	1	00 to FF
Error Code	1	83
Exception Code	1	See Modbus TCP/IP Exception Codes section.

Examples of Fault Response, Read Response, and Read Multiple Registers Command

Table 14 lists command examples to read register contents (register addresses 0020H to 0023H) from a drive with the slave address (unit identifier) 02H.
Table 15 shows examples of responses indicating that multiple registers have been read successfully. The contents read from 0020H are 1770H, 1770H, 0109H, and 0000H.
Table 16 shows examples of an error response when reading multiple registers. The exception code is 02H (indicating a register number error).

Table 14 Example Read Multiple Registers Command

Description		Data (H)
Slave Address		02
Function Code		03
Starting Register	Upper	00
	Lower	20
Quantity of Registers	Upper	00
	Lower	04

Table 15 Example Read Multiple Registers Response

Description		Data (H)
Slave Address		02
Function Code		03
Number of Data Bytes		08
Starting Register	Upper	17
	Lower	70
Next Register	Upper	17
	Lower	70
Next Register	Upper	01
	Lower	09
Last Register	Upper	00
	Lower	00

Table 16 Example Read Multiple Registers Error Response

Description	Data
Slave Address	02
Error Code	83
Exception Code	02

■ 06 (06 H) Write Single Register

This function code is used to write to a single register in the drive. The command specifies the address of the register to be written and the value to write. The normal response is an echo of the request, returned after the register contents have been written.

Table 17 Write Single Register Command

Description	Byte(s)	Data (H)
Slave Address	1	00 to FF
Function Code	1	06
Register Address	2	0000 to FFFF
Register Value	2	0000 to FFFF

Table 18 Write Single Register Response

Description	Byte(s)	Data (H)
Slave Address	1	00 to FF
Function Code	1	06
Register Address	2	0000 to FFFF
Register Value	2	0000 to FFFF

Table 19 Write Single Register Error Response

Description	Byte(s)	Data (H)
Slave Address	1	00 to FF
Error Code	1	86
Exception Code	1	See Modbus TCP/IP Exception Codes section.

Examples of Register Write Command

Table 20 lists command examples when writing register value 0003H to register address 0001H in a drive with the slave address (unit identifier) 01H.
Table 21 shows examples of responses indicating that the write command has been executed successfully. The command specifies the value and the register address to write to.
Table 22 shows examples of an error response when writing to a register. The exception code is 21H (indicating a register number error).

Table 20 Example Write Single Register Command

Description		Data (H)
Slave Address		01
Function Code		06
Register Address	Upper	00
	Lower	01
Register Value	Upper	00
	Lower	03

Table 21 Example Write Single Register Response

Description		Data (H)
Slave Address		01
Function Code		06
Register Address	Upper	00
	Lower	01
Register Value	Upper	00
	Lower	03

Table 22 Example Write Single Register Error Response

Description	Data (H)
Slave Address	01
Error Code	86
Exception Code	21

■ 16 (10 H) Write Multiple Registers

This function code is used to write to a contiguous block of registers in the drive. The command specifies the starting register address, the number of registers and the values to be written. The command packs two bytes per register. For each register in the command the first byte contains the most significant bits and the second byte contains the least significant bits. The normal response returns the function code, starting address and quantity of registers written.

Table 23 Write Multiple Register Command

Description	Byte(s)	Data (H)
Slave Address	1	00 to FF
Function Code	1	10
Starting Register	2	0000 to FFFF
Quantity of Registers	2	N <1>
Number of Data Bytes	1	N <1> x 2
Register Values	N <1> x 2	0000 to FFFF

<1> N = Quantity of Registers (range is 1 - 16)

Table 24 Write Multiple Register Response

Description	Byte(s)	Data (H)
Slave Address	1	00 to FF
Function Code	1	10
Starting Register	2	0000 to FFFF
Quantity of Registers	2	N <1>

<1> N = Quantity of Registers

Table 25 Write Multiple Register Error Response

Description	Byte(s)	Data (H)
Slave Address	1	01
Error Code	1	90
Exception Code	1	See Modbus TCP/IP Exception Codes section.

Examples of Multiple Register Write Command

Table 26 lists command examples when writing register values 0001H and 0258H to register addresses 0001H and 0002H in a drive with the slave address (unit identifier) 01H.
Table 27 shows examples of responses indicating that the write command has been executed successfully. The command specifies the beginning of the register address and the number of registers.
Table 28 shows examples of an error response when writing to a register. The exception code is 02H (indicating a register number error).

Table 26 Example Write Multiple Registers Command

Description		Data (H)
Slave Address		01
Function Code		10
Starting Register	Upper	00
	Lower	01
Quantity of Registers	Upper	00
	Lower	02
Number of Data Bytes		04
First Register Data	Upper	00
	Lower	01
Next Register Data	Upper	02
	Lower	58

Table 27 Example Write Multiple Registers Response

Description		Data (H)
Slave Address		01
Function Code		10
Starting Register	Upper	00
	Lower	01
Quantity of Registers	Upper	00
	Lower	02

Table 28 Example Write Multiple Registers Error Response

Description	Data (H)
Slave Address	01
Error Code	90
Exception Code	02

■ 23 (17 H) Read/Write Multiple Registers

This function code performs a combination of one read operation and one write operation in a single Modbus TCP/IP transaction. The write operation is performed before the read. The command specifies the starting read address, quantity of contiguous registers to read, starting write address, quantity of contiguous registers to write and the values to be written. The normal response contains the values of the registers that were read.

For both the address and the values, the first byte contains the most significant bits and the second byte contains the least significant bits.

Table 29 Read/Write Multiple Registers Command

Description	Byte(s)	Data (H)
Slave Address	1	00 to FF
Function Code	1	17
Read Starting Register	2	0000 to FFFF
Quantity of Registers to Read	2	M <1>
Write Starting Register	2	0000 to FFFF
Quantity of Registers to Write	2	N <2>
Write Byte Count	1	N <2> x 2
Write Register Values	N <2> x 2	0000 to FFFF

<1> M = Quantity of Registers to Read (range is 1 - 16)
<2> N = Quantity of Registers to Write (range is 1 - 16)

Table 30 Read/Write Multiple Registers Response

Description	Byte(s)	Data (H)
Slave Address	1	00 to FF
Function Code		17
Number of Data Bytes	1	M <1> x 2
Read Register Values	M <1> x 2	Values contained in slave registers.

<1> M = Quantity of Registers to Read.

Table 31 Read/Write Multiple Registers Error Response

Description	Byte(s)	Data (H)
Slave Address	1	00 to FF
Error Code	1	97
Exception Code	1	See Modbus TCP/IP Exception Codes section.

Read/Write Multiple Registers

Table 32 lists command examples when reading registers 0001H and 0002H and then writing register values 0103H and 0258H to register addresses 0102H and 0103H in a drive with the slave address (unit identifier) 01H.
Table 33 shows examples of responses indicating that the read/write multiple registers command has been executed successfully. Read data 1 contains the value of register address 0001H (0001H). Read data 2 contains the value of the register address 0002H (0002H).
Table 34 shows examples of an error response when the command to read and write to multiple registers has failed. The exception code is 02H (indicating a register number error).

Table 32 Example Read/Write Multiple Registers Command

Description		Data (H)
Slave Address		01
Function Code		17
Read Starting Register	Upper	00
	Lower	01
Quantity of Registers to Read	Upper	00
	Lower	02
Write Starting Register	Upper	01
	Lower	02
Quantity of Registers to Write	Upper	00
	Lower	02
Write Byte Count		04
First Write Register Data	Upper	01
	Lower	03
Next Write Register Data	Upper	02
	Lower	58

Table 33 Example Read/Write Multiple Registers Response

Description		Data (H)
Slave Address		01
Function Code		17
Number of data bytes		04
Read Data 1	Upper	00
	Lower	01
Read Data 2	Upper	00
	Lower	02

Table 34 Example Read/Write Multiple Registers Error Response

Description	Data (H)
Slave Address	01
Error Code	97
Exception Code	02

◆ Modbus TCP/IP Exception Codes

An error may occur when the option responds to a command. The response message will contain one of the Error Codes defined in ***Table 35***.

Table 35 Modbus TCP/IP Exception Codes

Error Code (H)	Error Name and Cause
01	Function Code Error. Attempted to set a function code from a PLC other than 03, 06, 10, or 17 (H).
02	Register Number Error. A register number specified in the command message does not exist.
03	Bit Count Error. • Invalid command message quantity • In a write message, the value for write byte count does not match twice the value of the stated quantity of registers to write
21	Data Setting Error. • Control data or parameter write data is outside the allowable setting range • Attempted to write a contradictory parameter setting
22	Write Mode Error. • Attempted to write while the drive was operating to a parameter that cannot be written during run • During an EEPROM data error (CPF06), the master attempted to write to parameter other than A1-00 to -05, E1-03, or o2-04 • Attempted to write to a read-only register
23	DC Bus Undervoltage Write Error. • Attempted to write from the master during an undervoltage fault (Uv1) • Attempted to execute an Enter command during Uv1
24	Write Error During Parameter Process. Master attempted writing to the drive while the drive was processing parameter data.

◆ Control Connection Timeout

The option has a safety feature that declares a fault if communications between the master and drive is lost after the master commanded the drive to run.

A controlled connection is defined as one in which a master commands the drive by writing to register 01H. After this write, the option will begin a timer. The timer will be reset upon subsequent writes to register 01H. If the timer exceeds the value programmed in drive parameter F7-16, then the option will declare a BUS ERROR to the drive. A value of 0 in F7-16 means that the timeout is disabled.

The drive reaction to a BUS ERROR is programmable through drive parameter F6-01.

8 Web Interface

The web server interface to the drive option allows management of diagnostic information through a standard web browser. The embedded web pages include:

- Main page (Information)
- Drive Status page (Status, Monitor and Fault History)
- Network Monitor page (Network Monitor)

◆ Main Page (Information)

The embedded main page shows basic option information such as IP address, MAC address, and firmware version. This page also shows the status of the option and provides links to the other embedded web pages.

Figure 10 Main Page View

◆ Drive Status Page (Status, Monitor and Fault History)

The embedded drive status page shows basic I/O information and drive state information.

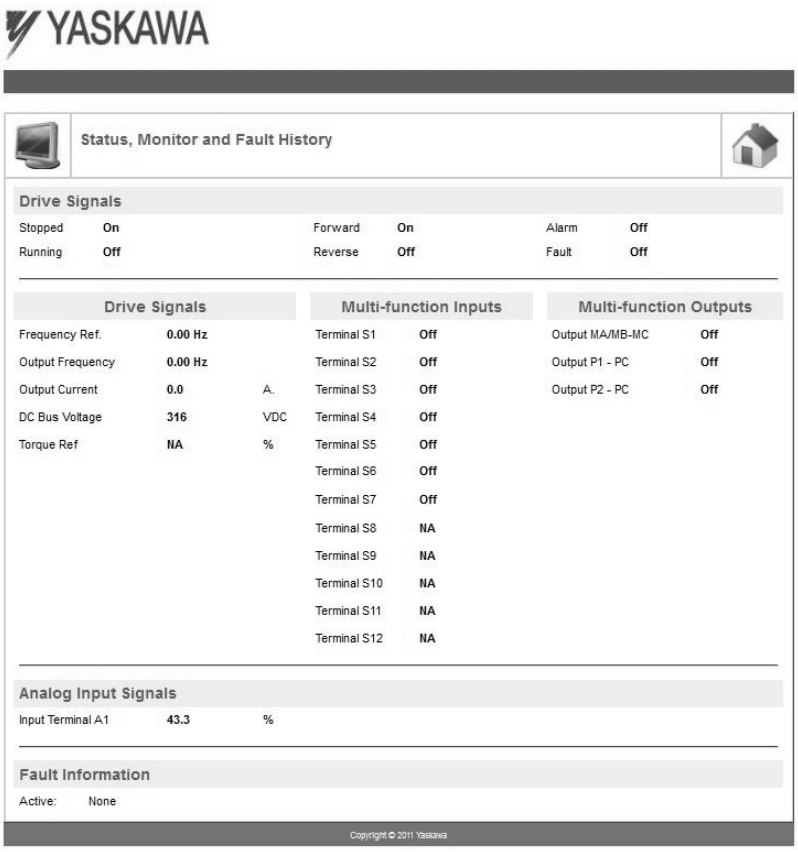

Figure 11 Drive Status Page View

◆ Network Monitor Page (Network Monitor)

The embedded network monitor page shows the status of the option network traffic and open I/O connections.

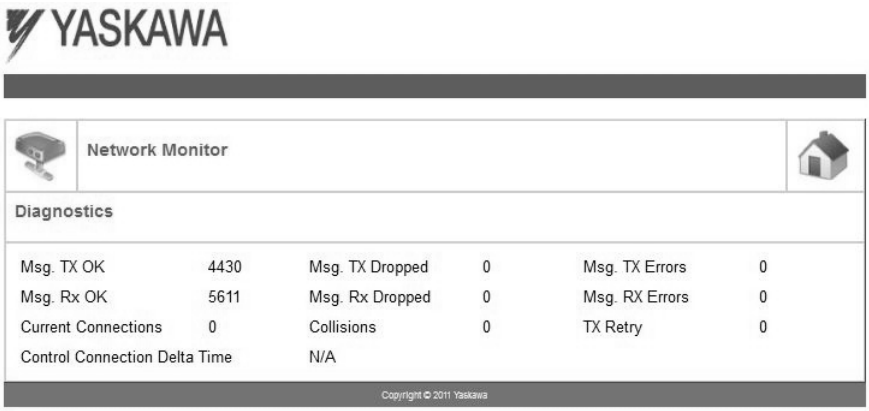

Figure 12 Network Monitor Page View

Table 36 Network Monitor Explanations

Network Monitor	Explanation
Msg Tx OK	Cumulative number of messages transmit successfully from the option.
Msg Rx OK	Cumulative number of messages received successfully to the option.
Current Connections	Current number of open connections.
Control Connection Delta Time	The time between the last two writes to the Control register, MEMOBUS/Modbus address 0001H.
Msg Tx Dropped	Cumulative number of messages dropped due to output network buffer being full and unable to hold the new message.
Msg Rx Dropped	Cumulative number of messages dropped due to input network buffer being full and unable to hold the new message.
Collisions	Cumulative number of collisions (half duplex only) reported by the MAC/PHY (Media Access Control/ Physical Connection).
Msg Tx Errors	Cumulative number of transmit underruns and transmit stops reported by the MAC/PHY.
Msg Rx Errors	Cumulative number of receive overruns, receive stops, and receive error frames reported by the MAC/PHY.
Tx Retry	Cumulative number of transmits in which the 1st attempt was delayed due to busy medium reported by the MAC/PHY.

Note: Cumulative counters are reset when the power supply is cycled.

9 Troubleshooting

◆ Drive-Side Error Codes

Drive-side error codes appear on the drive digital operator. Causes of the errors and corrective actions are listed in *Table 37*. For additional error codes that may appear on the drive digital operator, refer to the drive Technical Manual.

■ Faults

Both bUS (Option communication error) and EF0 (External fault input from the option) can appear as an alarm or as a fault. When a fault occurs, the digital operator ALM LED remains lit. When an alarm occurs, the ALM LED flashes.

If communication stops while the drive is running, use the following questions as a guide to help remedy the fault:

- Is the option properly installed?
- Is the communication line properly connected to the option? Is it loose?
- Is the controller program working? Has the controller/PLC CPU stopped?
- Did a momentary power loss interrupt communications?

Table 37 Fault Display and Possible Solutions

LED Operator Display		Fault Name
bUS	bUS	Option Communication Error.
		• After establishing initial communication, the connection was lost • Only detected when the run command or frequency reference is assigned to the option (b1-01 = 3 or b1-02 = 3)
Cause		**Possible Solution**
Master controller (PLC) has stopped communicating		• Check that power is supplied to the PLC • Check that PLC is not in program mode
Communication cable is not connected properly		• Check for faulty wiring • Correct any wiring problems
A data error occurred due to noise		• Check the various options available to minimize the effects of noise • Counteract noise in the control circuit, main circuit, and ground wiring • If a magnetic contactor is identified as a source of noise, install a surge absorber to the contactor coil • Make sure the cable used meets the Modbus TCP/IP requirements • Make sure the option ground wire is connected between option FE terminal and the drive ground terminal connected to earth ground
Option is damaged		If there are no problems with the wiring and the error continues to occur, replace the option.
Control Connection Timeout		The control connection timer value set in F7-16 has timed out.
Duplicate IP Address		The option shares IP Address with at least one other node. Check the setting value of F7-03 and F7-04.

LED Operator Display		Fault Name
EF0	EF0	Option Card External Fault
		The alarm function for an external device has been triggered.
Cause		**Corrective Action**
An external fault is being sent from the upper controller (PLC)		• Remove the cause of the external fault • Reset the external fault input from the PLC device
Problem with the PLC program		Check the program used by the PLC and make the appropriate corrections.
PLC is in the Idle Mode.		• Set the PLC to the Run Mode. • Set the drive parameter F6-54 to 0 (Enabled) not to detect errors while the PLC is in the Idle Mode.

LED Operator Display		Fault Name
oFA00	oFA00	Option Card Connection Error (CN5-A)
		Option is not properly connected.
Cause		**Possible Solution**
Non-compatible option connected to the drive		Connect an option that is compatible with the drive.

LED Operator Display		Fault Name
oFA01	oFA01	Option Card Fault (CN5-A) Option is not properly connected.
Cause		**Possible Solution**
Problem with the connectors between the drive and option		Turn the power off and check the connectors between the drive and option.

LED Operator Display		Fault Name
oFA03	oFA03	Option Card Error (CN5-A) Option self-diagnostics error.
Cause		**Possible Solution**
Option hardware fault		Replace the option.

LED Operator Display		Fault Name
oFA04	oFA04	Option Card Error (CN5-A) Option flash write mode.
Cause		**Possible Solution**
Option hardware fault		Replace the option.

LED Operator Display		Fault Name
oFA30 to oFA43	oFA30 to oFA43	Option Card Connection Error (CN5-A) Communication ID error.
Cause		**Possible Solution**
Option hardware fault		Replace the option.

LED Operator Display		Fault Name
oFb00	oFb00	Option Card Connection Error (CN5-B) Non-compatible option is connected.
Cause		**Possible Solution**
Non-compatible option connected to the drive.		Connect the correct option to CN5-A.

LED Operator Display		Fault Name
oFb02	oFb02	Option Card Fault (CN5-B) Two of the same options are connected at the same time.
Cause		**Possible Solution**
Options AI-A3 or DI-A3 were connected to the CN5-B port while an option was already connected to CN5-A.		• Only one type of AI-A3 or DI-A3 option can be connected to the drive. • The SI-EM3 option can only be connected to CN5-A.

LED Operator Display		Fault Name
oFC00	oFC00	Option Card Connection Error (CN5-C) Non-compatible option is connected.
Cause		**Possible Solution**
Non-compatible option connected to the drive.		Connect the correct option to CN5-A.

LED Operator Display		Fault Name
oFC02	oFC02	Option Card Fault (CN5-C) Option flash write mode.
Cause		**Possible Solution**
Options AI-A3 or DI-A3 are connected to the CN5-B port with an option connected to CN5-A.		• Only one type of AI-A3 or DI-A3 option can be connected to the drive • The SI-EM3 option can only be connected to CN5-A

■ Minor Faults and Alarms

LED Operator Display		Minor Fault Name
CALL	CALL	Serial Communication Transmission Error
		Communication is not established.

Cause	Possible Solution	Minor Fault (H2-□□ = 10)
Communication wiring is faulty, there is a short circuit, or improper connection	Check for wiring errors: • Correct the wiring • Remove ground shorts and reconnect loose wires	YES
Programming error on the master side	Check communications at start-up and correct programming errors.	
Communication circuitry is damaged.	• Perform a self-diagnostics check • Replace the drive if the fault continues to occur	

■ Option Fault Monitors U6-98 and U6-99

The option can declare error/warning conditions via drive monitor parameters on the drive digital operator as shown in ***Table 38***.

Table 38 Option Fault Monitor Descriptions

Fault Condition	Fault Declared	Status Value (U6-98/U6-99)	Description
No Fault	n/a	0	No faults
Force Fault	EF0	3	Network sent a message to force this node to the fault state
Network Link Down	BUS ERROR	1200	No network link to the option
Connection Time-out	BUS ERROR	1201	The control connection timer (F7-16) timed out
Duplicate IP Address	BUS ERROR	1202	This node and at least one other node have the same IP address
Default MAC Address	None	1203	Factory default MAC Address programmed into the option. Contact a Yaskawa representative or the nearest Yaskawa sales office for details.

Two drive monitor parameters, U6-98 and U6-99, assist the user in network troubleshooting.

- U6-98 displays the first declared fault since the last power cycle. U6-98 is only cleared upon drive power-up.
- U6-99 displays the present option status. U6-99 is cleared upon a network-issued fault reset and upon power-up.

If another fault occurs while the original fault is still active, parameter U6-98 retains the original fault value and U6-99 stores the new fault status value.

◆ Option Compatibility

A limited number of options may be simultaneously connected to the drive depending on the type of option. Refer to ***Table 39*** for more information. More details can be found in the Options and Peripheral Devices chapter of the drive Technical Manual.

Table 39 Option Installation Compatibility

Option	Connector	Number of Possible Options
SI-C3, SI-N3, SI-P3, SI-S3, SI-EM3, etc. <1>	CN5-A	1
PG-B3, PG-X3, etc.	CN5-B, C	2 <2>
DO-A3, AO-A3, AI-A3, DI-A3, etc.	CN5-A, B, C	1

<1> When installed in CN5-A, the AI-A3 and DI-A3 options can be used to set the frequency reference or replace the drive analog inputs with higher resolution. When installed in CN5-B or CN5-C, these options can only be used for monitoring; their input levels will be displayed in U1-17 or U1-21 to U1-23.
<2> Use the CN5-C connector when connecting only one option to the drive; use both CN5-B and CN5-C when connecting two options.

10 Specifications

Table 40 Option Specifications

Item	Specification
Model	SI-EM3
Supported Messages	• Read Multiple Registers (03H) • Write Single Register (06H) • Write Multiple Registers (10H) • Read and Write Registers (17H) Commands that support multiple registers have a maximum Read and Write size of 16 registers.
Option Conformance	Modbus-IDA Passed
Connector Type	RJ45 8-pin Shielded Twisted Pair Cat 5e cable
Physical Layer Type	Isolated Physical Layer
IP Address Setting	Programmable from drive keypad or network
Communication Speed	Programmable from drive keypad or network: 10/100 Mbps, auto-negotiate.
Number of Connections	Modbus TCP/IP: 10 Web Page Access: 2
Duplex Mode	Half-forced, Auto-negotiate, Full-forced
Address Startup Mode	Static, BOOTP, DHCP
Ambient Temperature	-10 °C to +50 °C (14 °F to 122 °F)
Humidity	95% RH or lower with no condensation
Storage Temperature	-20 °C to +60 °C (-4 °F to 140 °F) allowed for short-term transport of the product
Area of Use	Indoor (free of corrosive gas, airborne particles, etc.)
Altitude	1000 m (3280 ft.) or lower

◆ Revision History

Revision dates and manual numbers appear on the bottom of the back cover.

MANUAL NO. SIEP C730600 57A

Published in Japan March 2012 12-3

Date of original publication

Date of publication

Date of Publication	Revision Number	Section	Revised Content
March 2012	–	–	First edition

YASKAWA AC Drive 1000-Series Option

Modbus TCP/IP

Technical Manual

DRIVE CENTER (INVERTER PLANT)
2-13-1, Nishimiyaichi, Yukuhashi, Fukuoka, 824-8511, Japan
Phone: 81-930-25-3844 Fax: 81-930-25-4369
http://www.yaskawa.co.jp

YASKAWA ELECTRIC CORPORATION
New Pier Takeshiba South Tower, 1-16-1, Kaigan, Minatoku, Tokyo, 105-6891, Japan
Phone: 81-3-5402-4502 Fax: 81-3-5402-4580
http://www.yaskawa.co.jp

YASKAWA AMERICA, INC.
2121 Norman Drive South, Waukegan, IL 60085, U.S.A.
Phone: (800) YASKAWA (927-5292) or 1-847-887-7000 Fax: 1-847-887-7310
http://www.yaskawa.com

YASKAWA ELÉTRICO DO BRASIL LTDA.
Avenda Fagundes Filho, 620 Bairro Saude, São Paulo, SP04304-000, Brasil
Phone: 55-11-3585-1100 Fax: 55-11-5581-8795
http://www.yaskawa.com.br

YASKAWA EUROPE GmbH
Hauptstrasse 185, 65760 Eschborn, Germany
Phone: 49-6196-569-300 Fax: 49-6196-569-398
http://www.yaskawa.eu.com

YASKAWA ELECTRIC UK LTD.
1 Hunt Hill Orchardton Woods, Cumbernauld, G68 9LF, United Kingdom
Phone: 44-1236-735000 Fax: 44-1236-458182
http://www.yaskawa.co.uk

YASKAWA ELECTRIC KOREA CORPORATION
9F, Kyobo Securities Bldg., 26-4, Yeouido-dong, Yeongdeungpo-gu, Seoul, 150-737, Korea
Phone: 82-2-784-7844 Fax: 82-2-784-8495
http://www.yaskawa.co.kr

YASKAWA ELECTRIC (SINGAPORE) PTE. LTD.
151 Lorong Chuan, #04-01, New Tech Park, 556741, Singapore
Phone: 65-6282-3003 Fax: 65-6289-3003
http://www.yaskawa.com.sg

YASKAWA ELECTRIC (SHANGHAI) CO., LTD.
12F, Carlton Bld., No.21 HuangHe Road, HuangPu District, Shanghai 200003, China
Phone: 86-21-5385-2200 Fax: 86-21-5385-3299
http://www.yaskawa.com.cn

YASKAWA ELECTRIC (SHANGHAI) CO., LTD. BEIJING OFFICE
Room 1011, Tower W3 Oriental Plaza, No. 1 East Chang An Ave.,
Dong Cheng District, Beijing, 100738, China
Phone: 86-10-8518-4086 Fax: 86-10-8518-4082

YASKAWA ELECTRIC TAIWAN CORPORATION
9F, 16, Nanking E. Rd., Sec. 3, Taipei, 104, Taiwan
Phone: 886-2-2502-5003 Fax: 886-2-2505-1280

YASKAWA ELECTRIC INDIA PRIVATE LIMITED
#17/A Electronics City, Hosur Road Bangalore 560 100 (Karnataka), India
Phone: 91-80-4244-1900 Fax: 91-80-4244-1901
http://www.yaskawaindia.in

YASKAWA ELECTRIC CORPORATION

In the event that the end user of this product is to be the military and said product is to be employed in any weapons systems or the manufacture thereof, the export will fall under the relevant regulations as stipulated in the Foreign Exchange and Foreign Trade Regulations. Therefore, be sure to follow all procedures and submit all relevant documentation according to any and all rules, regulations and laws that may apply.

Specifications are subject to change without notice for ongoing product modifications and improvements.

© 2012 YASKAWA ELECTRIC CORPORATION. All rights reserved.

MANUAL NO. SIEP C730600 57A

Published in Japan March 2012 12-3
11-12-7